25–lb. ASCE

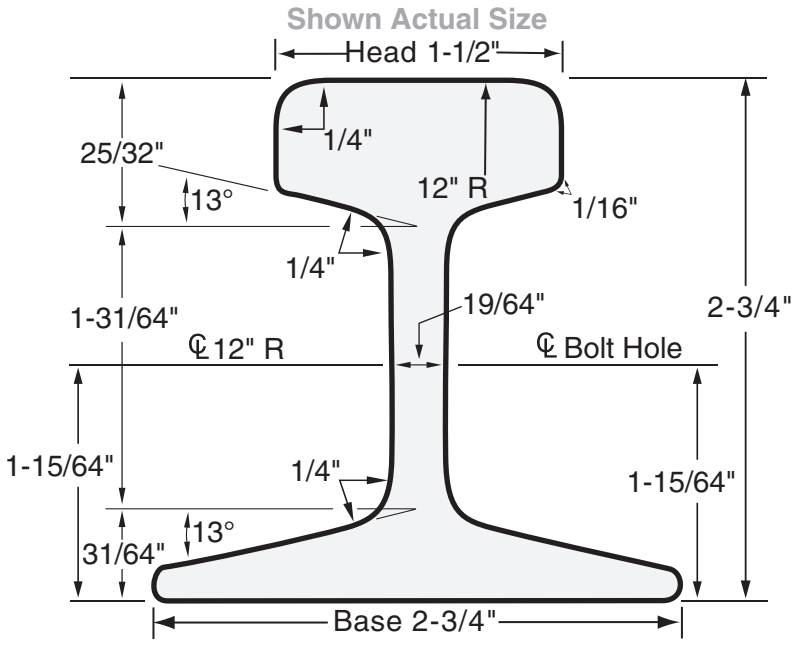

Rail Type:	25 AS
Section Number:	2540
Nominal Weight:	25 lbs/yd
Standard Length:	30’ (40’ may also be available)
Standard Drilling:	2” X 4” with 5/8” dia. holes
Splice Bar Length:	16-1/8”
Splice Bar Weight:	6 lbs/pr **with hardware:** 7 lbs/pr
Track Bolt:	1/2” X 2-1/2”

Area in^2: 2.4

Section Modulus in^3:
Head: 1.76

Moment of Inertia in^4: 2.5

(503) 286-3691 FAX (503) 286-2097 © 2014 www.HarmerSteel.com sales@harmersteel.com