119–lb. AREMA

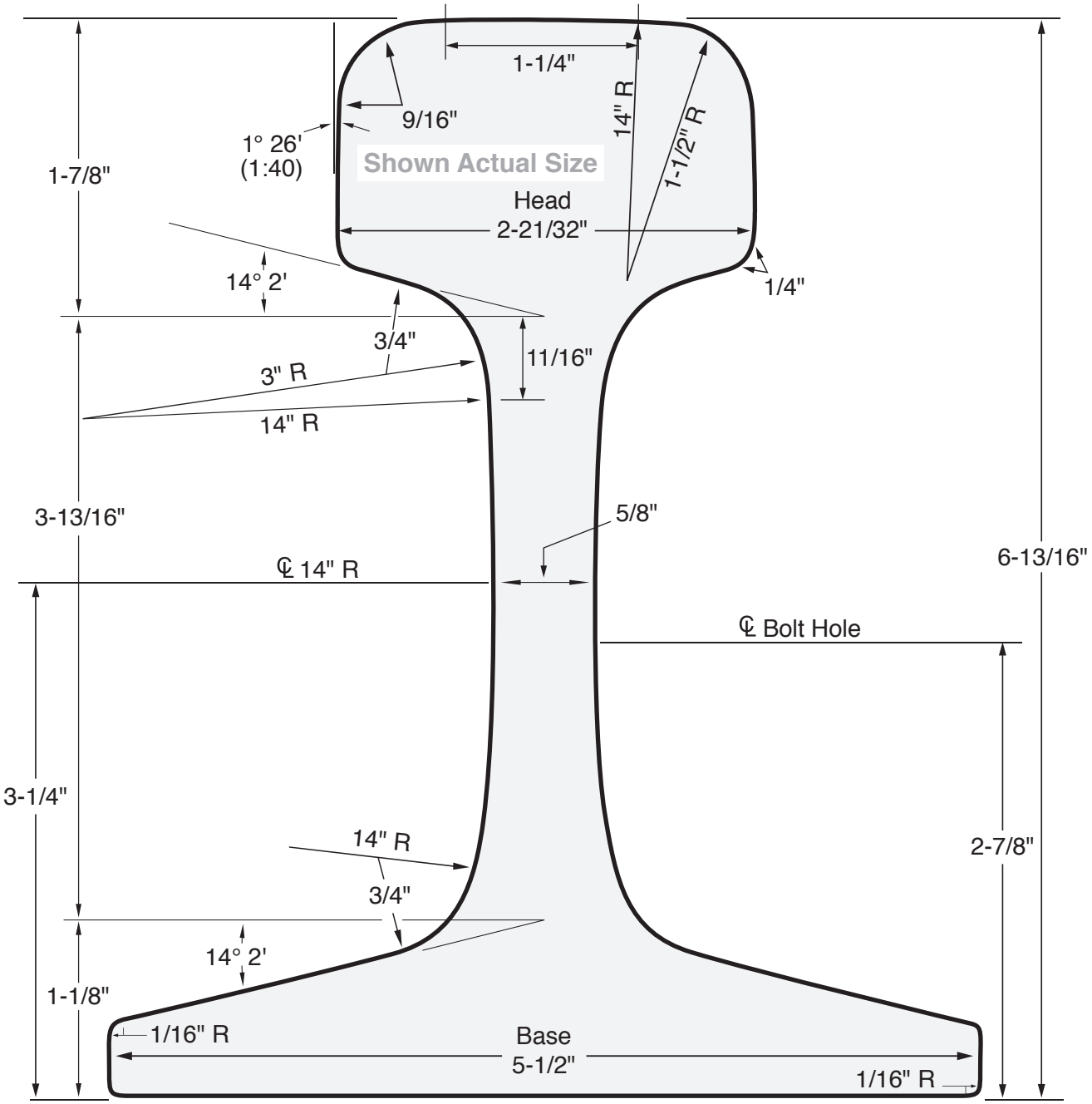

Rail Type:	119 RE
Section Number:	11925
Nominal Weight:	119 lbs/yd
Standard Length:	39’
Standard Drilling:	3-1/2” X 6” or 3-1/2” X 6” X 6” with 1-1/8” dia. holes
Joint Bar Length:	24” or 36”
Joint Bar Weight:	**4-Hole bars:** 68 lbs/pr **with hardware:** 76 lbs/pr **6-Hole bars:** 102 lbs/pr **with hardware:** 110 lbs/pr
Track Bolt:	1” X 6”

Area in^2: 11.65

Section Modulus in^3:
Head: 19.4
Base: 22.9

Moment of Inertia in^4: 71.4

BOLT SIZE MAY VARY DEPENDING ON BAR MANUFACTURE & TYPE OF WASHER USED.

(503) 286-3691 FAX (503) 286-2097 © 2014 www.HarmerSteel.com sales@harmersteel.com